Intelligent Syringe Pump

NEW

ISPLab01

3 years warranty

Features

- Colorful LCD display:
  Friendly interface, 4.3 inch LCD display every technical parameter in real time.

- Input syringe inner diameter function:
  Can choose the injector from the list or input the injector inner diameter directly.

- Two measurement mode for selection:
  Infusion volume ––– Infusion flow rate, Infusion volume ––– Infusion time.

- 4 different working modes:
  Infusion, withdrawal, infusion/withdrawal, withdrawal/infusion. The parameters of each working mode saving separately.

- Alarm function:
  The pump will stall and give an alarm when the drive structure of the pump is blocked.

Product Introduction

The intelligent syringe pump with infusion/withdrawal mode, stainless steel body, and 4.3" color LCD screen is easy to operate. It can install and fix different types of injectors or syringes in the same time, and it is suitable for transferring micro flow rates with high precision (non–medical).

Model Number

ISPLab01, ISPLab02, ISPLab04 , ISPLab06 , ISPLab08, ISPLab10 , ISPLab12

Syringe Pump External Control Schematic

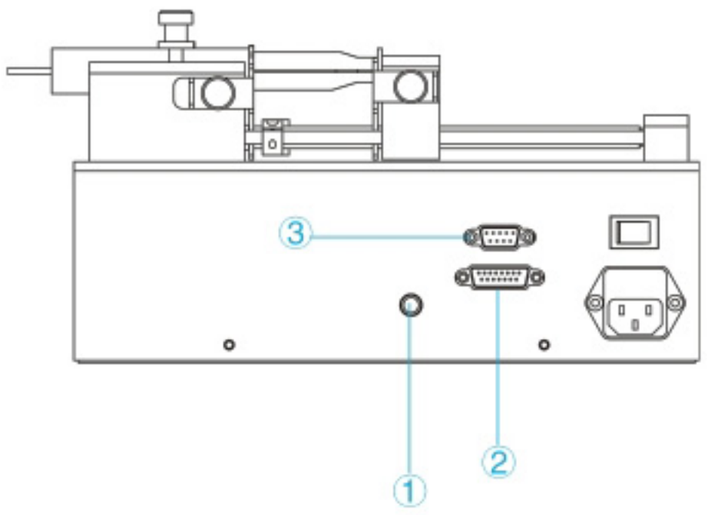

① Foot pedal connector: Connect with foot pedal switch

② 15 Pin connector: External input and output

③ 9 Pin connector : RS232 and RS485

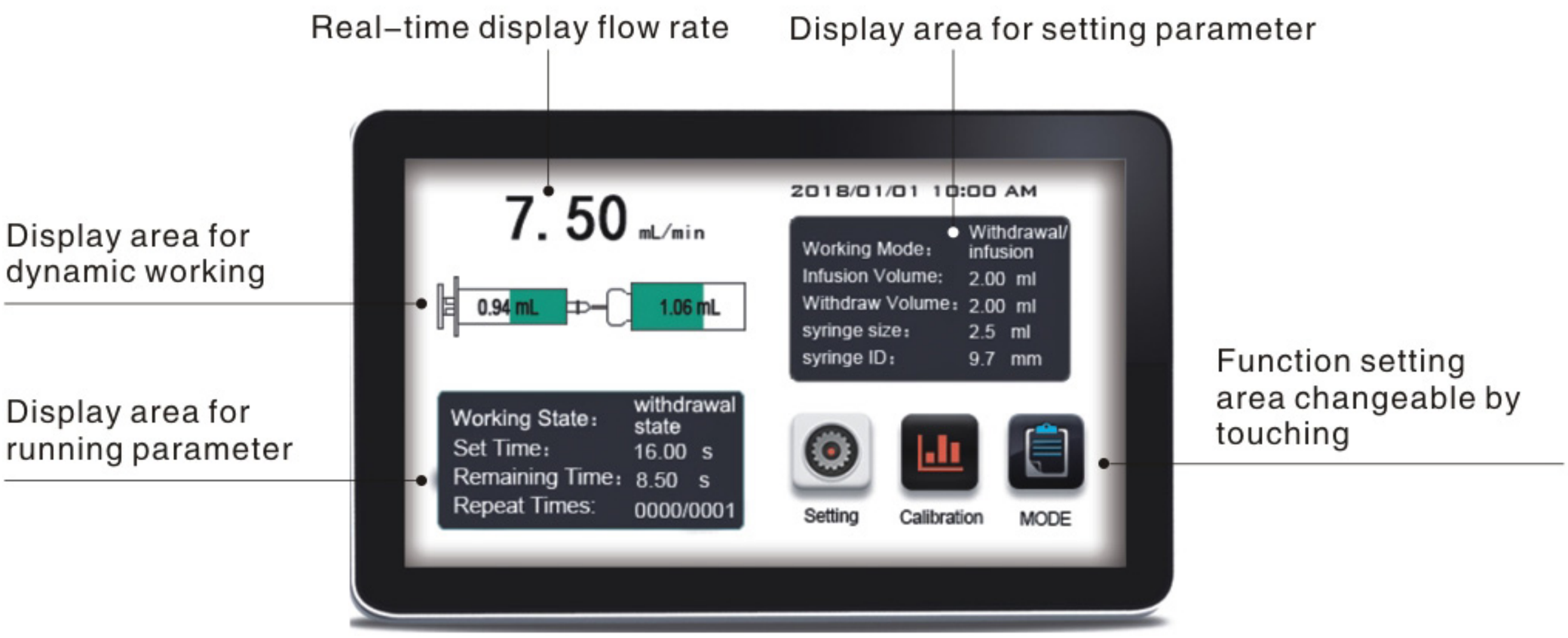

ISPLab06

3 years warranty

ISPLab10

3 years warranty

Technical Specifications							
Working mode	Infusion, withdrawal, infusion/withdrawal, withdrawal/infusion						
Channel number	1	2	4	6	8	10	12
Syringe size	10μL–140mL		10μL–10mL				
Flow rate	0.001uL/min–127mL/min		0.001uL/min–21.997mL/min				
Drive dimension(mm)	282*209*165	282*236*158	282*209*175				
Infusion volume per microstep	0.078μm						
Min. linear rate	5μm/min						
Max. linear rate	132mm/min						
Min. step rate	0.035ms/Mirco step						
Max. step rate	0.937sec/Mirco step						
Max.linear force	8–20kgf, online adjust						
Advance per microstep	0.078μm						
Back distance	0.01–10mm						
Common modes	Can save at most 60 common modes						
Accuracy	Error ≤ ±0.5% (stroke≥30%maximum stroke)						
Syringe	Installed syringe size and custom syringe ID						
Display	Industrial grade 4.3” LCD color display						
Control method	Touch screen and Mechanical keypad						
Power–off memory	Display the previous data parameter after power supply again						
Output state	OC gate signal output,used to indicate running status and direction						
External control signal	Start/stop signal, withdrawal and infusion signal, active switch signal: 5V, 12V, and 24V for option; Start/stop signal, passive switch signal, such as foot pedal switch						
Communication interface	RS232/RS485, Modbus protocol(RTU mode)						
Power supply	AC 90-264V						
Condition temperature	0-40℃						
Relative humidity	<80%						
IP rate	IP31						

Syringe	Inside Diameter(mm)	Flow Rate(μL/min–mL/min)	
		ISPLab01/ISPLab02	ISPLab04-ISPLab12
1mL	4.70	0.087~2.290	0.087~2.290
2.5mL	9.70	0.370~9.755	0.370~9.755
5mL	12.48	0.612~16.147	0.612~16.147
10 mL	15.89	0.992~26.177	0.992~26.177
20mL	20.00	1.571~41.469	——
30 mL	22.50	1.988~52.484	——
50 mL	28.90	3.280~86.588	——